ENVEA STACKFLOW 400

SYSTEM DESCRIPTION

The STACKFLOW 400 is an advanced flue gas flow measurement system for continuously monitoring releases from industrial sources. This instrument complies with European monitoring standards EN 16911-2 and EN 15267-3 for QAL1.

The STACKFLOW 400 satisfies the need for high quality assurance on emission release data, reporting mass emissions (kg/year) as well as concentration monitoring.

It uses PCME's unique FlueSonic™ technology and mathematical measurement algorithm (patent pending) that allows the transit time of the signal to be measured accurately in real stack conditions, hence permitting:

- An extended measurement path of 400mm in a single, stack-mounted probe design
- Capability to deal with flow profiles across the extended measurement path
- Tolerance to contamination and flow eddies

APPLICATIONS

The STACKFLOW 400 is suitable for measuring the flue gas flow rate after both bag-filter and electrostatic precipitator arrestment plant and satifies the need for high quality measurement on emission release data. From a regulatory perspective its high quality assurance features make it suitable as a compliance device.

Typical application areas are:

- Waste-to-Energy and Incineration plants
- Emissions from Steel, Chemical and Mineral processing applications
- Gas Turbines and Coal-fired Power plants
- Industrial stacks (before or after final arrestment plant)
- Variable speed fans on dust arrestment plant

"Satisfies the need for high quality assurance on emission release data, reporting mass emissions (kg/year) as well as concentration monitoring"

KEY FEATURES

- Unique extended measurement path (400mm) permits accurate and increased representative measurement
- Robust flow measurement for industrial applications
- Inbuilt automatic reference self-checks for regulatory compliance (QAL3)
- Facilitates stack velocity, volumetric flow and pollutant mass release calculations when linked to gas and dust CEMS
- Angled probe version to fit existing perpendicular ports

OVERVIEW - TECHNOLOGY

Principles of Operation

The instrument uses PCME's innovative FlueSonic™ Ultrasonic Technology measuring the time of flight of ultrasonic signals between two transducers (see Figure 1). Each transducer emits an ultrasonic pulse that is detected by the other. The sensor is mounted in the stack at an angle (typically 45 degrees) such that the transducers lie upstream and downstream of each other.

The time of flight of an ultrasonic pulse travelling between the two transducers depends on the distance it has to travel, the speed of sound in the gas and the velocity of the gas. The time of flight of a pulse travelling in the same direction as the gas (downstream) is shorter than the time of flight of the pulse travelling against the direction of the flow (upstream). The difference in these flight times is directly proportional to the velocity of the flue gas.

The stack flow velocity in the measurement path is calculated from the upstream and downstream transit time in a way that is independent of the speed of sound in the gas, flue gas temperature or pressure of flue gas composition. The flow rate is calculated by multiplication of average flue gas velocity by the stack cross-section area.

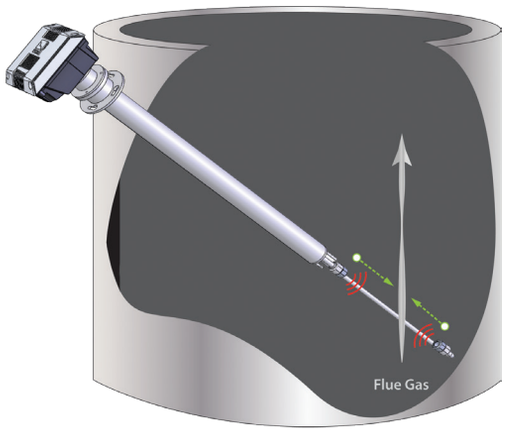

Figure 1: Principle of Operation of the PCME STACKFLØW 400

CALIBRATION AND INBUILT SELF-CHECKS

The STACKFLOW 400 measures the average velocity in the stack across a measurement path length of 400mm. It is important to locate this measurement path in a representative location across the stack flow profile and as such the instrument is provided with a 900mm extension tube with movable flange so that the measurement path can be located in the optimum position (probe insertion length 1.4m), see Figure 2.

Figure 2: PCME STACKFLOW 400 sensor with movable flange to locate the optimum measurement path

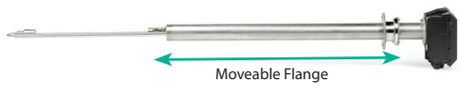

As with all flow measurement devices, the relationship between instrument output and average flow across the full cross-sectional area of the stack is calibrated by comparison to measurements made using a Standard Reference Method (such as Pitot traverses or tracer methods pursuant to EN ISO 16911-2).

Automated Reference Checks

The STACKFLOW 400 performs Lower and Upper Reference (Zero and Span) sensor self-checks (a requirement of EN 16911-2), see Figure 3. These checks assess not only the performance of the electronics and measurement algorithm, but also the performance and correct operation of the transducers, including their ability to transmit, receive and discriminate actual ultrasonic signals from noise and offsets in the stack environment.

Figure 3: PCME STACKFLOW 400
Lower and Upper Reference Self-Checks

These automatic Quality Assurance features provide outputs which can be used for QAL3 reporting requirements (as defined in EN ISO 16911-2) and provide feedback to the user on the correct operation of the instrument.

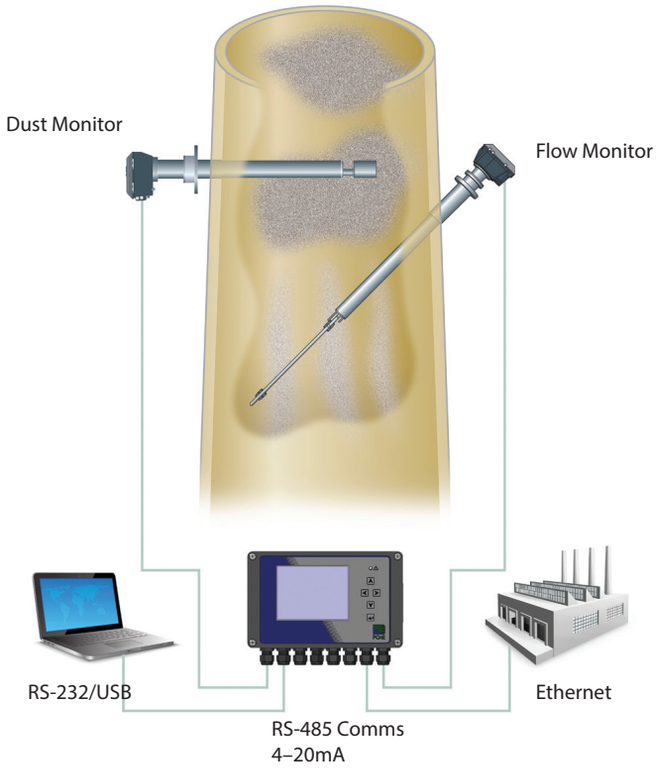

Figure 4: STACKFLOW 400 PLUS combined with PCME dust monitor for integrated concentration and Mass emissions reporting

FEATURES & BENEFITS

STACKFLOW 400 Sensors

Certification	QAL 1 Approved to EN 16911-2 and EN 15267-3
Automated QAL3 checks	In-built reference materials (for QAL3) without need for compressed air (unlike Pitot's pressure transducers).
Representative measurement	Extended probe design with measurement path of 400mm and adjustable flange for fine tuning to where flow profile is more representative.
Fluesonic™ Higher accuracy	Unique FlueSonic™ technology giving higher accuracy over flue gas velocities of 0–50 m/s and flue gas temperatures of -20°C to 200°C.
Tolerant to contamination	No need of air purge to prevent dust contamination with flue gas abovedewpoint or dust < 1000mg/m^3.
Multi-sensor networked system	The system can be configured as a large multi-sensor networked system (up to 16 sensors) for multi-stack and plant-wide monitoring
Easy integration to existing CEMS	The sensor can be easily fitted to existing gas and dust monitoring systems. Mass emission monitoring and calculation of particulate releases (when combined with PCME MultiController and dust monitor or plant PLC/SCADA) systems (Figure 4).
Easy installation	Single stack mounting flange without the need for additional stack access at different levels or installation of cross-stack ultrasonic instruments. The angled probe version can be supplied to fit existing perpendicular ports without the need to fit a new angled port and standoff (Figure 5).

STACKFLOW 400 Controllers

Advanced functionality	• Graphical display and recording of velocity, temperature, flow rate and QAL3 results and trends • Mass emission calculations • Sensor setup and configuration capability • Easy integration with dust monitors for mass emission calculation and reporting • Industrial communications (Ethernet, Modbus, 4–20mA output/input, alarm relays output/input) • Multilingual, menu-driven display and inbuilt data logging for recording measured values and internal diagnostic parameters

Straight Sensor

Installation Angle:	45° to stack wall
Sensor Options:	Horizontal stack orientation Vertical stack orientation
Insertion Length:	1360 mm
Weight:	8.6 kg

Angled Sensor

Installation Angle:	90° to stack wall
Flange:	4" BSP Adaptor (Option)
Sensor Options:	Horizontal stack orientation Vertical stack orientation
Insertion Length	805 mm
Weight:	6.2 kg

Sensor Common Specifications

Sensor Material:	Transducers: Hastelloy Sensor Body: 316 SS
Enclosure Dimensions:	W 148 x H 192 x D 106 mm
Enclosure Rating:	IP65
Power Supply Voltage:	24V DC (via Control Unit)
Power Consumption:	Average load: 120mA (24V) Maximum load: 140mA (24V)
Outputs:	1x RS-485 Modbus 2x Relays 1x 4–20mA
Input:	1x Digital input
Flange:	3"/4" ASME // DN80/100 PN10/16 (combined flange), also DN40 PN6

PRODUCT SPECIFICATION

Overview		
Number of sensors/channels	1	1–32
Display	Two-tone grey, backlit graphical LCD	High-contrast, anti-glare 7" (viewable) TFT LCD
Multiple Data Viewing	PC or RS-485	PC/RS-485/Ethernet simultaneously
Dimensions	W220 x H124 x D80 mm	W390 x H221 x D118 mm
Power supply voltage	100–240V AC (50/60 Hz)	85–265V AC (50/60 Hz)
Protection Rating	IP65	IP66
Ambient Temperature Range	-20°C to 50°C	-20°C to 50°C
Features and Functions		
Navigation keys	Up/Down/Left/Right/Enter	Up/Down/Left/Right/Enter plus 5 function keys: 3x short-cut keys and 2 user-programmable keys
Icon-driven, multilingual menus	n/a	•
Secure password protection	•	•
Sensor system setup / configuration options	•	•
Configurable emission alarm levels	•	•
Sensor calibration screens	•	•
Seamless integration with existing PCME control units and sensors	n/a	•
Data Logging*		
Long-term Log	12 months @ 15 minutes	48 months @ 15 minutes
Short-term Log	7 days @1 minute	28 days @ 1 minute
Pulse Log	8 hours @ 1 seconds	32 hours @ 1 second
Alarm Log	500 entries	500 entries
System Outputs		
Ethernet (RJ45)	n/a	• Connection type: 100Base-T/Tx 100 Mb/s
USB 2.0	n/a	• Suitable for connecting to a local PC or laptop
Relays	2 off (programmable)	4 off (programmable)
4–20mA	1 off (programmable)	4 off (programmable)
RS-485	1	1
System Inputs		
Digital User selectable for: PLANT OFF indication, Bag-filter cleaning sequences, multiple calibrations	1	4
4–20mA	0	2

Application Conditions Specification

Stack Temperature:	-20°C to 200°C (-4°F to 392°F)
Stack Diameter:	≥0.5 m (1.6 ft)
Stack Pressure:	±100 mbar
Ambient Temperature*:	-20°C to 50°C (-4°F to 122°F)

Measurement Specifications

Length of Measurement Path:	400 mm (16 in., nominal)
Response Time:	40 s
Gas Velocity:	±(0–50) m/s ±(0–30) m/s (Certification Range) Resolution: 0.1 m/s
Minimum Detection Velocity:	0.0 m/s

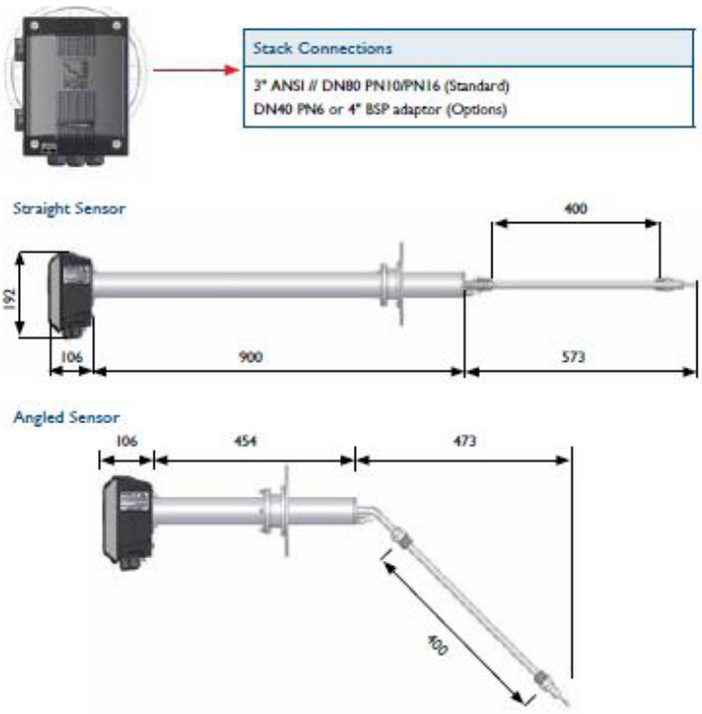

Note: For more information related to the product specification and options, refer to the STACKFLOW 400 Specification Guide (available on request from PCME).